Ardax

Pole Mount Stand

Mounting Solutions for POS & Commercial Display System

PS-3010

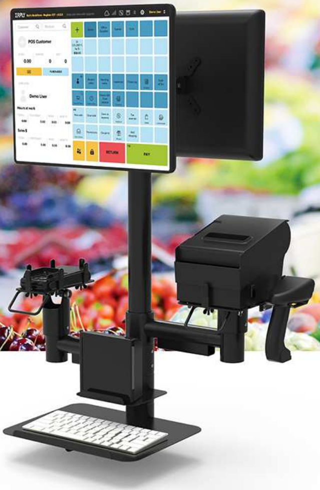
POS Customer
Demo User
RETURN
PAY

SUGGESTED MODEL

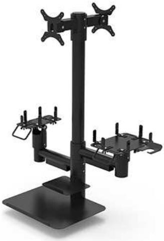

PS-3010

suitable for counters with

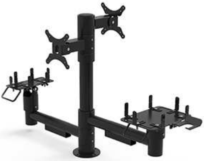

PS-3020

suitable for counters with

height 700-900mm

- Pole stand: height 750mm
- Screen mount: dual screens
- Payment terminal arm: length 220mm
- Printer arm: length 220mm
- Scanner Tray
- Keyboard Tray

height 900-1100mm

- Pole stand: height 500mm
- Screen mount: two single-screens
- Payment terminal arm: length 320mm
- Printer arm: length 320mm

FEATURES

Steel Construction

Rugged steel construction for commercial use and strong bearing capacity.

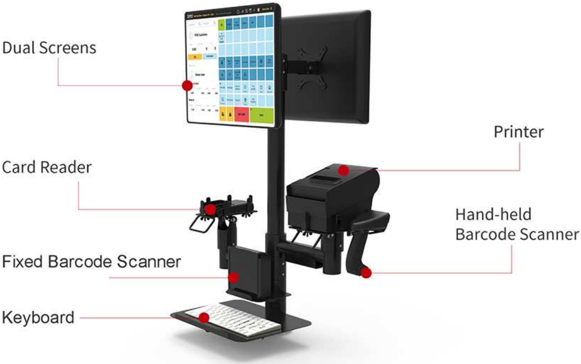
Dual Screens
Card Reader
Fixed Barcode Scanner
Keyboard
Printer
Hand-held
Barcode Scanner

Monitors, payment terminal, printer, scanner gun, barcode scanner, keyboard not provided.

Flexible Installation

Each holder can rotate 360° around the pole and could be adjusted in height.
Holders for screen, payment terminal and printer can be adjustable in angle.

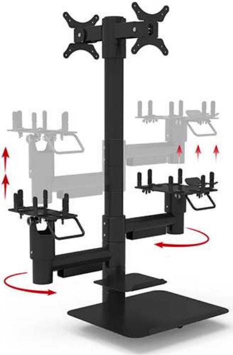

Single or dual holders for screens, adjustable in angle.

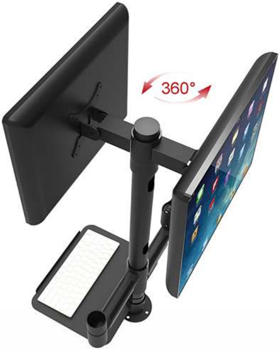

Internal Cable Management

Wire management stand for easy routing of cable. Keep cable neat and out of sight.

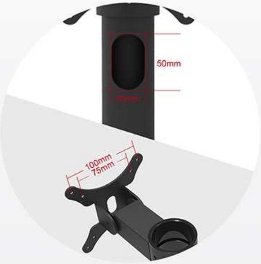
50mm
100mm
75mm

BUILD YOUR SOLUTION

Pole Stand	 H/500mm	 H/750mm
Screen Mount	 Single screen	 Dual screens
Payment Terminal Tray	 L/220mm	 L/320mm
Printer Tray	 L/220mm	 L/320mm

Multi-purpose Tray	Small Size for scanner	Large Size for keyboard

Base Plate

Freestanding Base
350 x 380 x 10mm

APPLICATIONS

Checkout Counter

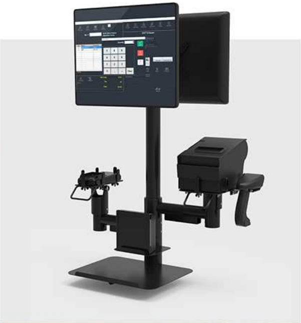

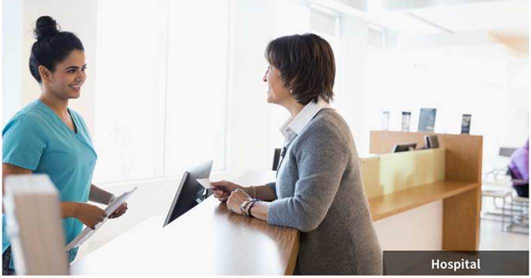

Hospital

SPECIFICATIONS

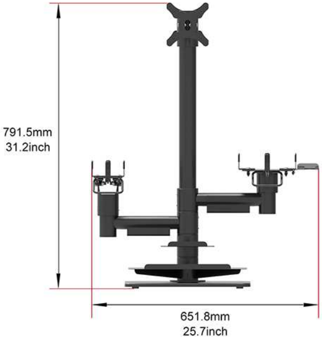
791.5mm
31.2inch
651.8mm
25.7inch

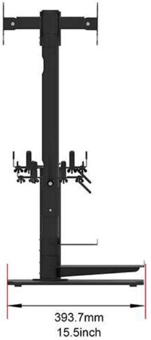
393.7mm
15.5inch

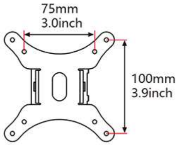
75mm
3.0inch
100mm
3.9inch

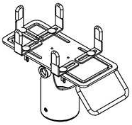

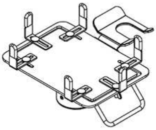

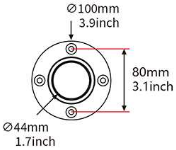
⌀100mm
3.9inch
80mm
3.1inch
⌀44mm
1.7inch

Card reader fixator size range：
W(80~135mm/3.1~5.3inch)

Printer fixator size range:
W(120~160mm/4.7~6.3inch)
D(190~250mm/7.5~9.8inch)

Model No.	PS-3010
Supported Tablets	13.3” -15.6”
Screen	Dual screen
Dimensions(mm)	Pictured
Dimension(inch)	Pictured
Net Weight	18.5kg
Material	SPCC
Color	Black/White
Customization	Color , Tablet enclosure

ASSEMBLY & INSTALLATION

Packing List

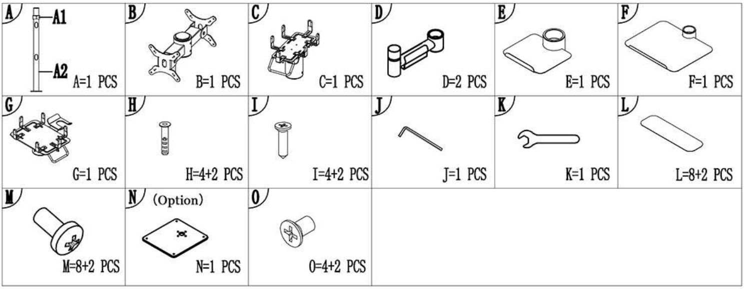
A
A1
A2
A=1 PCS
B
B=1 PCS
C
C=1 PCS
D
D=2 PCS
E
E=1 PCS
F
F=1 PCS
G
G=1 PCS
H
H=4+2 PCS
I
I=4+2 PCS
J
J=1 PCS
K
K=1 PCS
L
L=8+2 PCS
M
M=8+2 PCS
N
(Option)
N=1 PCS
O
O=4+2 PCS

Installation

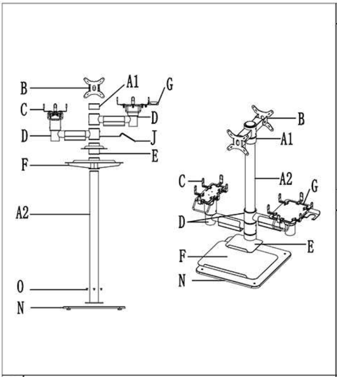
B
A1
G
C
D
D
J
E
F
A2
O
N
B
A1
A2
C
G
D
E
F
N

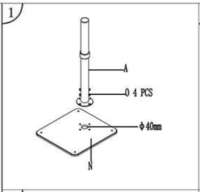
1
A
O 4 PCS
ϕ40mm
N

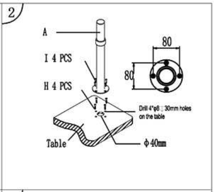
2
A
I 4 PCS
H 4 PCS
80
80
Drill 4*φ8 30mm holes on the table
Table
ϕ40mm

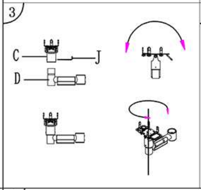

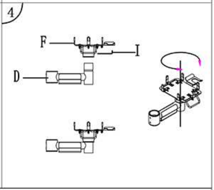

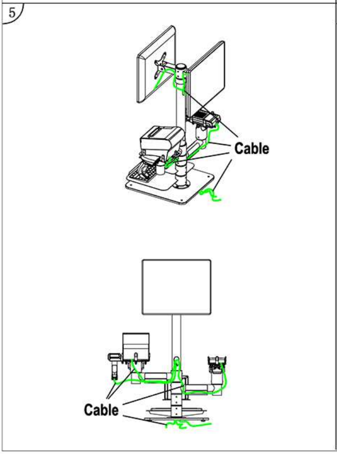
5
Cable
Cable

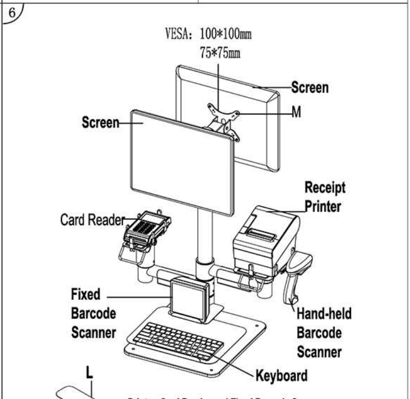
6
VESA: 100*100mm
75*75mm
Screen
M
Screen
Receipt Printer
Card Reader
Fixed Barcode Scanner
Hand-held Barcode Scanner
Keyboard
L

Printer, Card Reader and Fixed Barcode Scanner could be fixed by Double-side Adhesive Tape